TT-162-200

Technical Data Sheet

Double Toilet Tissue Holder with Hood
Surface Mounted

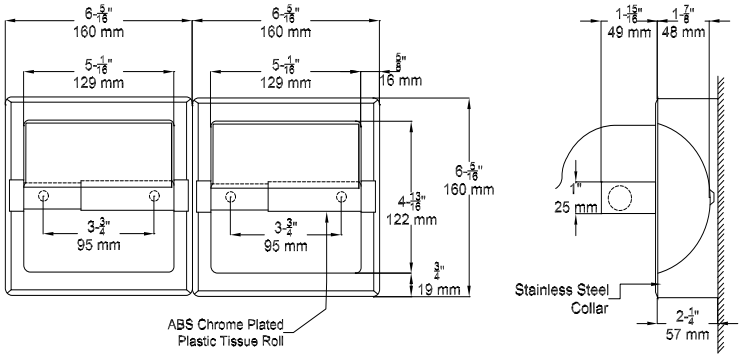

Front View

Side View

MATERIALS: 18-8 stainless steel, type 304, double roll holder with hoods and high impact resistant ABS plastic; chrome plated rollers.

SPECIFICATIONS: Surface mounted double toilet tissue roll holders with hoods is fabricated of 18-8 stainless steel, type 304. The rollers are fabricated of high impact resistant ABS plastic; chrome plated material. The hoods have a bright chrome finish and are attached at the top of unit with brass pivot rods which extend the full length. All exposed surfaces have a bright chrome finish.

CAPACITY: Two Standard Toilet Tissue Rolls up to 6" (152.4 mm) in diameter each

OVERALL SIZE: 12 5/8" W x 6 5/16" H x 5 3/16" D
(320 mm W x 160 mm H x 131 mm D)

OPERATION: The spindles of the unit are spring loaded and hold rolls in place. The spindles move freely allowing ease of paper dispenses. The hoods cause some friction on rolls which controls the delivery of paper.

INSTALLATION: Unit is to be installed as surface mounted to a wall or partition using #10 self tapping screws which are supplied with unit. ADA requires that unit be installed no more than 36" (914.4 mm) from the back wall located behind the toilet. The centerline of roller is to be installed at a minimum of 19" (482.6 mm) above finished floor up to 44" (1117.6 mm) as a maximum height.

The manufacturer reserves the right, without formal notification, to implement changes to the design and dimensions.
© 2008 Columbia Accessories
Edition: TT-162-200/001

PO Box 181, Columbia, SC 29202
Phone: 1-866-820-3579 Fax: 1-866-317-2786
Web Site: http://www.natpart.com